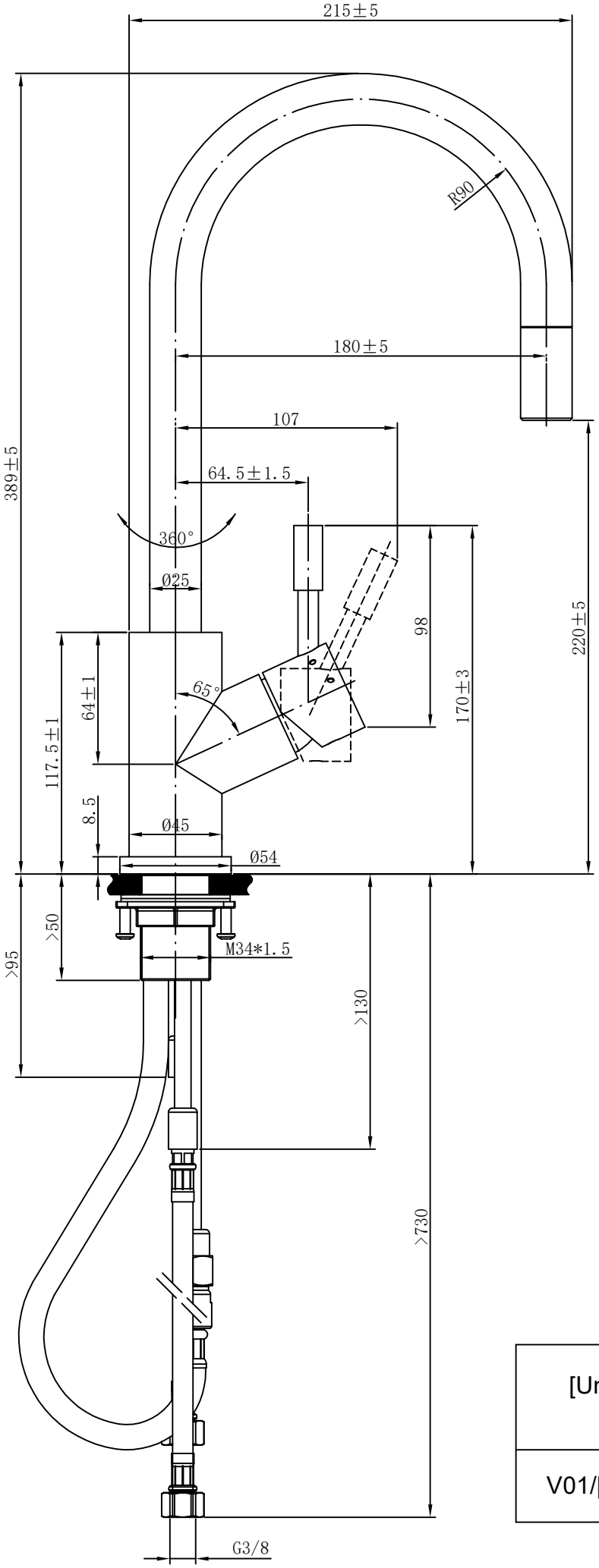

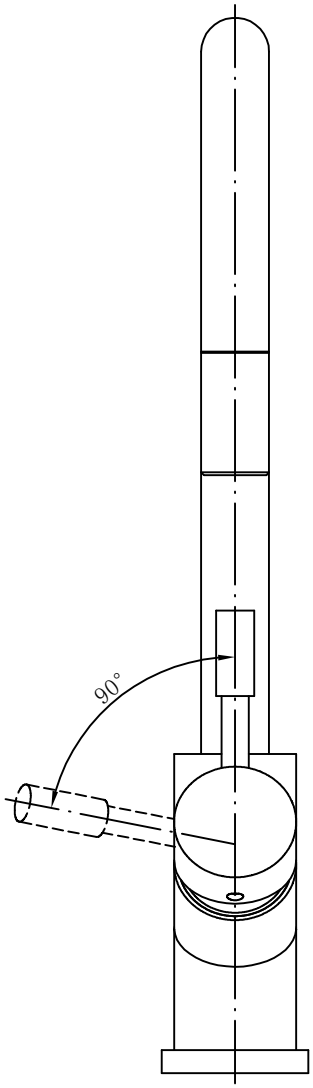

[Umbrella Flex] [925400]	Villeroy & Boch 1748
V01/[20/05/2021]	