Technische Daten/ Technical Data

KLUDI-VELA S
toilet brush holder

Ref.: 25974N5

Finishes:
N5 Stainless Brushed Nickel PVD

Product description
Manufacturer KLUDI GmbH & Co. KG
Typ: KLUDI-VELA S
toilet brush holder
Ref.: 25974N5

toilet brush holder
with toilet brush
satin glass container
wall mounted (screws or gluing)
with fixing material screws and dowels
glue-set Ref. 94006800-00 order separately
wall holder metal

Produktabbildung/ Product picture
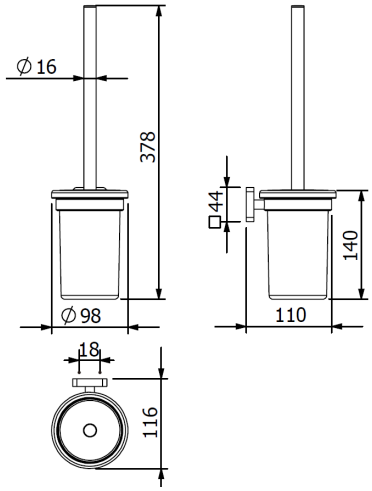
Maßzeichnung/ Dimensional drawing