Technische Daten/ Technical Data

KLUDI-VELA R
paper holder

Ref.: 5897153

Finishes:
53 matt white

Product description
Manufacturer KLUDI GmbH & Co. KG
Typ: KLUDI-VELA R
paper holder
Ref.: 5897153

paper holder
with shelf
fixed
wall mounted
with fixing material screws and dowels
wall holder metal

Produktabbildung/ Product picture
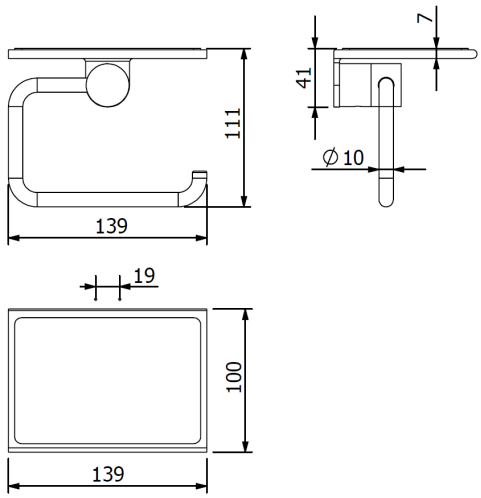
Maßzeichnung/ Dimensional drawing