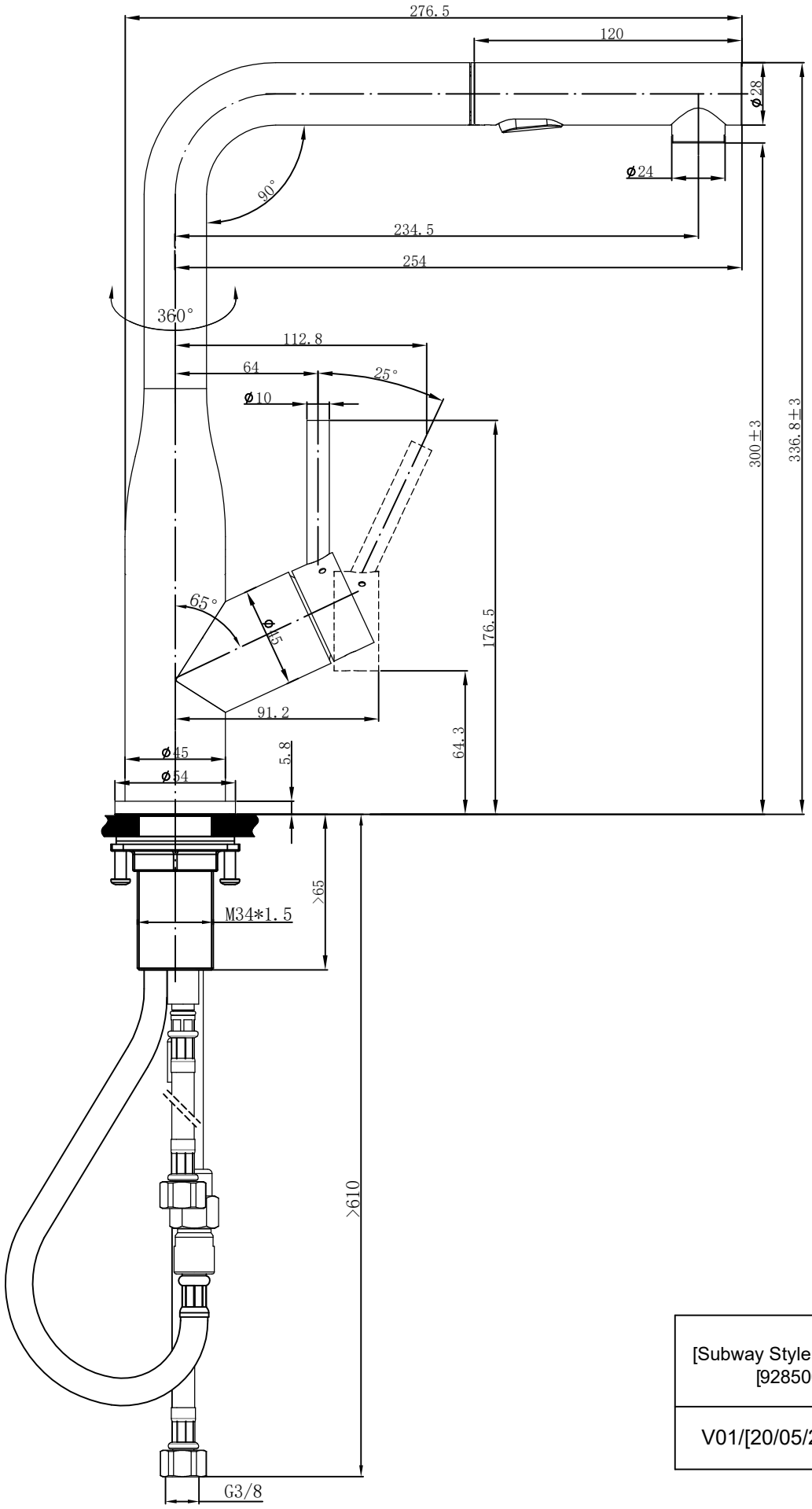

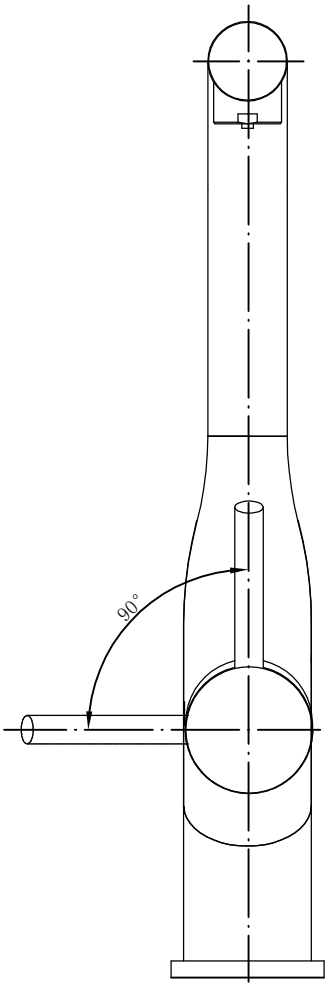

[Subway Style Shower] [928500]	Villeroy & Boch 1748
V01/[20/05/2021]	