Technische Daten/ Technical Data

KLUDI L STEEL
kitchen faucet
DN 15

Ref.: 45803F877

Finishes:
F8 stainless steel hairline finish

Product description
Manufacturer KLUDI GmbH & Co. KG
Typ: KLUDI L STEEL
kitchen faucet
Ref.: 45803F877

kitchen faucet
single lever mixer
1-hole mounted
solid lever, metal
lateral actuation
aerator M18 laminar
ceramic cartridge
lever perpendicular=cold water
flow rate at 3 bar 9 l/min.
swivel spout
flexible hoses G3/8 DVGW approved
shank-fixing

Produktabbildung/ Product picture



Maßzeichnung/ Dimensional drawing

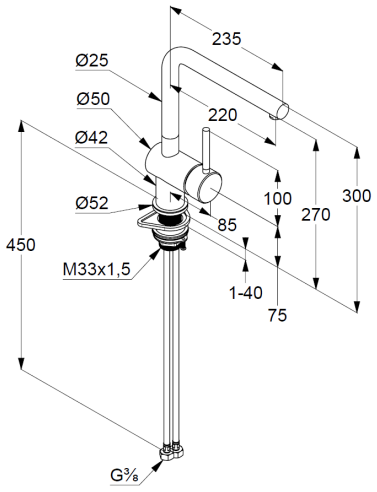

Durchfluss/ Flow rate

