Technische Daten/ Technical Data

KLUDI ZENTA SL
concealed single lever basin mixer
DN 15

Ref.: 482480565

Finishes:
05 chrome

Product description
Manufacturer KLUDI GmbH & Co. KG
Typ: KLUDI ZENTA SL
concealed single lever basin mixer
Ref.: 482480565

concealed basin mixer
projection 230mm
single lever mixer
trim set without pre-installation set
for preinstallation set KLUDI Ref.: 38242
vertical wall mounted
solid lever, metal
aerator, S-Pointer M24 PCA
flow rate at 3 bar 5 l/min.
fixed spout
EU taxonomy: max. 6 l/min. -
Substantial Contribution (SC) possible

Produktabbildung/ Product picture

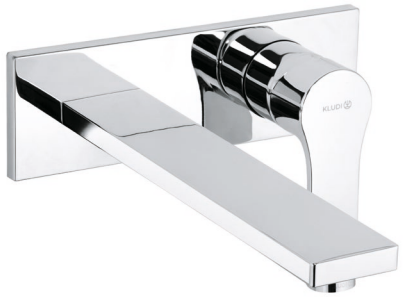

Maßzeichnung/ Dimensional drawing

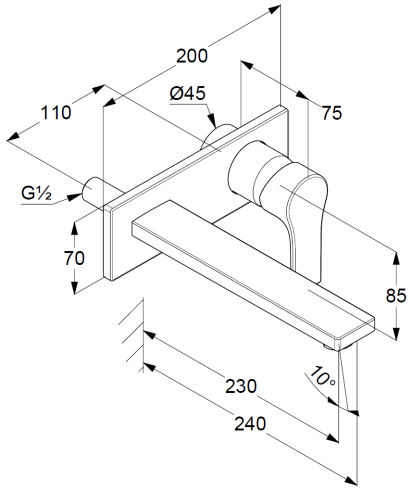

Durchfluss/ Flow rate

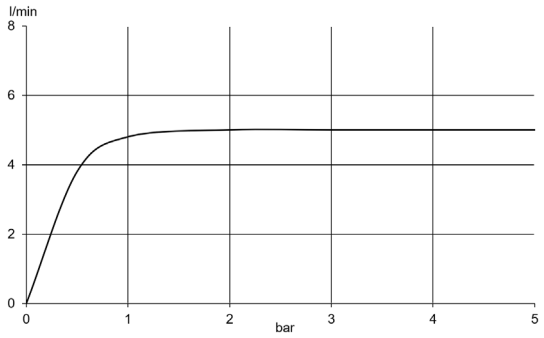

KLUDI